# Wide Slot Type

## KIM Series

| | | |
|---|---|---|
| Appearance | | |
| Detection method | | Thru–beam |
| Sensing distance | | 30mm |
| Output mode | | NPN and PNP open collector |
| Switch mode | | Selectable L.on/D.on |
| Standard test object | | Opaque objects diameter>2mm |
| Output instructions | | Yellow LED |
| Response time | | ≤1ms |
| Llight source | | Infrared LED (modulation) |
| Operating voltage | | 12~24V DC |
| Residual voltage | | ≤2.5V DC |
| Current consumption | | ≤15mA |
| Load current | | ≤200mA |
| Protective circuit | | Reverse polarity protection, short circuit protection |
| Ambient temperature | | −15℃~+55℃ |
| Withstand voltage | | 1000V/AC 50/60Hz 1 minute |
| Shock resistance | | 10 to 50 Hz with 1.5mm amplitude for 2 hours each in X, Y, and Z directions |
| Impact resistance | | 500m/s2(50G), 3 times in XYZ direction |
| Dielectric strength | | ≥50MΩ/500V DC |
| Protection degree | | IP60 |
| Material method | | Aluminum alloy |
| Connection | | 2M 4core cable |
| Model No. | NPN D.on/L.on | **KIM30-0304N** |
| | PNP D.on/L.on | **KIM30-0304P** |

### Dimensions

Umit: mm

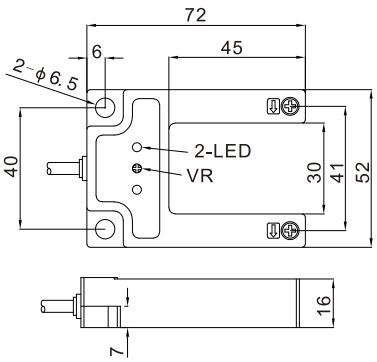


### Circuit diagram

NPN

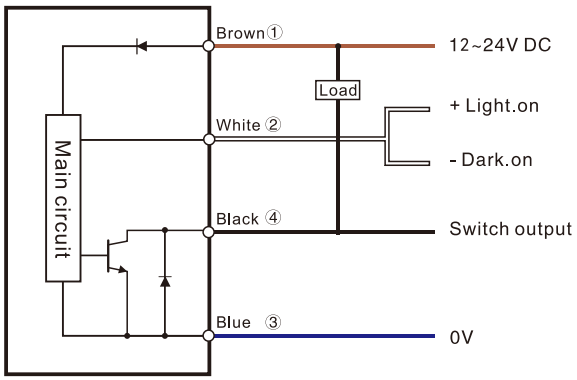


PNP

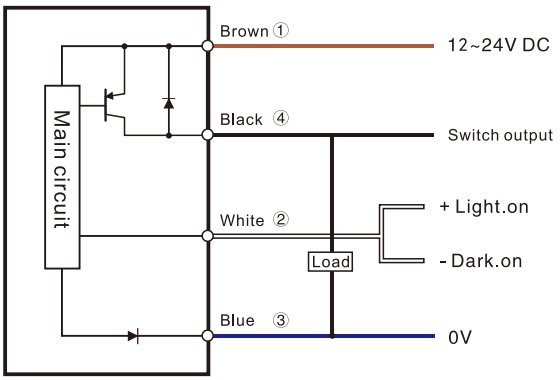


Fiber Optic
Slot Sensors
Photoelectric
Laser
Proximity
Displacement
Magnetic
Contact
Area
Ultrasonic
Vision
Vibration
Temperature
Annexes

Guidance

Slot type sensors
Mirco slot type
Slot type
Wide slot type
Label detection

## KIM Series



| | |
|---|---|
| Appearance | |
| Sensing distance | 2mm |
| Slot depth | 42mm |
| Slot width | 3mm |
| Llight source | Infrared light (940nm) |
| Switch mode | Selectable L.on/D.on |
| Operating voltage | 12~24V DC ± 10% |
| No-load current | 40mA |
| Load current | 100mA |
| Response frequency | 10KHz |
| Response time | ≤20 μ s |
| Protection circuit | Reverse prolarity protection, Output short circuit protection; Interference suppression |
| Protection degree | IP65 |
| Material | Aluminum |
| Connection method | M8 4–pin connector |
| Weight | 35g |
| Output method | NPN/PNP |
| Ambient brightness | Sunlight≤10000Lux |
| Model No. | **KIM07-0204NP** |


Fiber Optic
Slot Sensors
Photoelectric
Laser
Proximity
Displacement
Magnetic
Contact
Area
Ultrasonic
Vision
Vibration
Temperature
Annexes

Guidance

Slot type sensors
Mirco slot type
Slot type
Wide slot type
Label detection


### Dimensions

Umit: mm

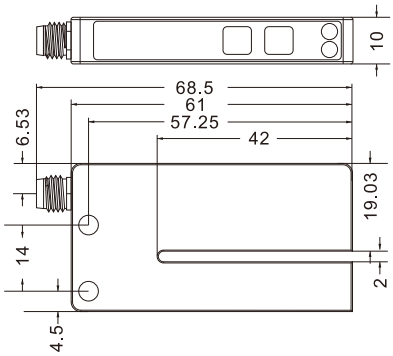


### Circuit diagram
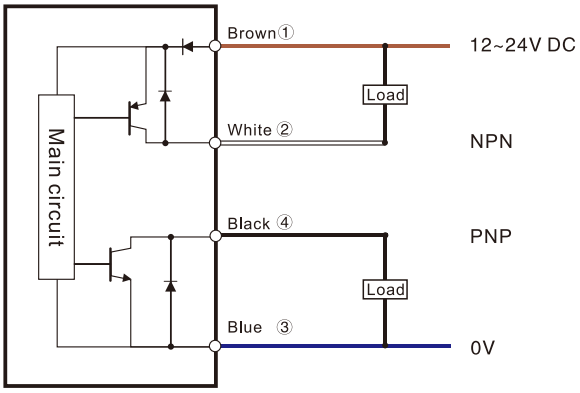
NPN/PNP